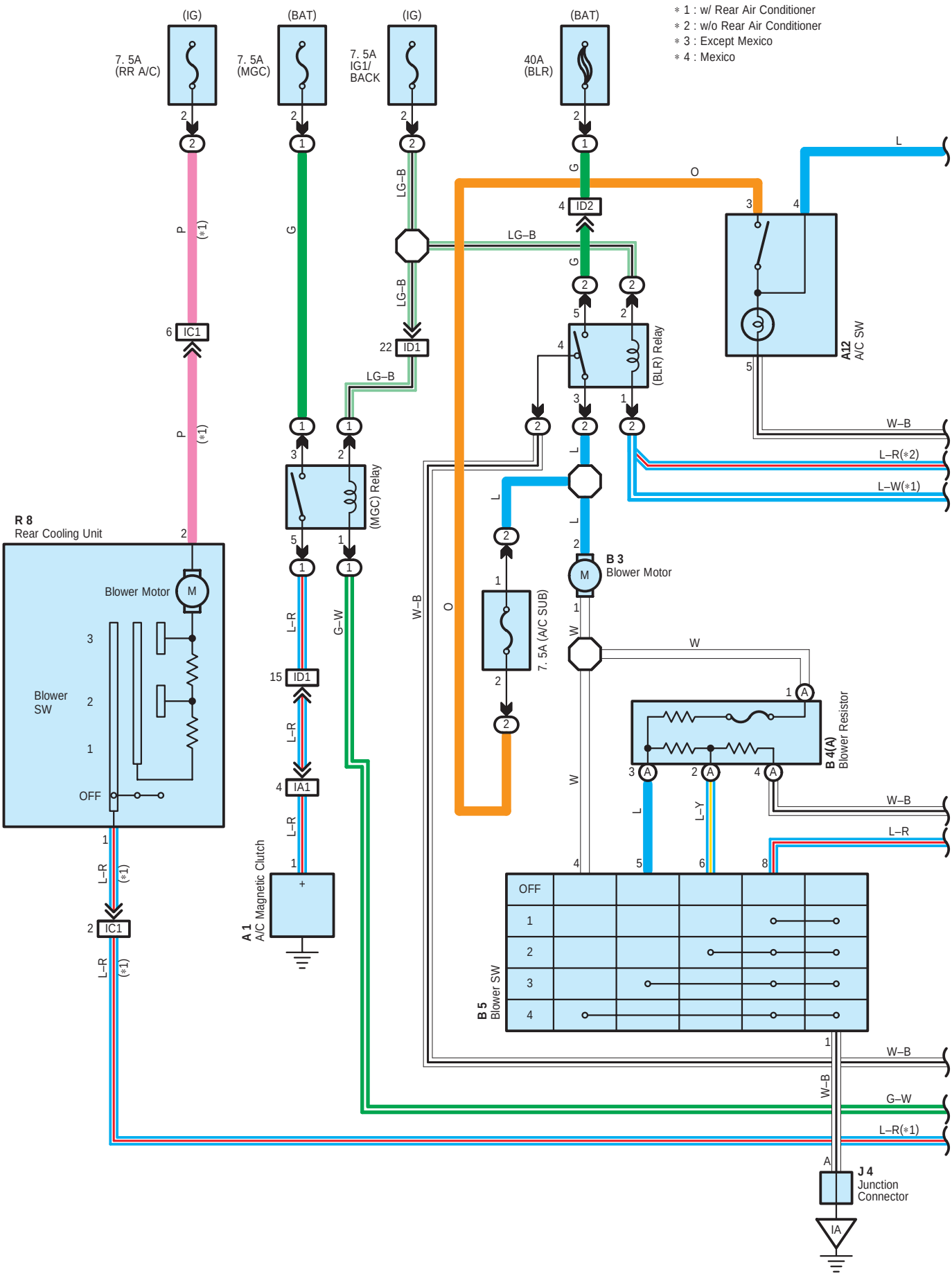
∗ 1 : w/ Rear Air Conditioner
∗ 2 : w/o Rear Air Conditioner
∗ 3 : Except Mexico
∗ 4 : Mexico
(IG)
7. 5A (RR A/C)
(BAT)
7. 5A (MGC)
(IG)
7. 5A IG1/ BACK
(BAT)
40A (BLR)
IC1
ID1
ID2
IA1
(BLR) Relay
(MGC) Relay
A12 A/C SW
R 8 Rear Cooling Unit
Blower Motor
Blower SW
OFF
B 3 Blower Motor
7. 5A (A/C SUB)
B 4(A) Blower Resistor
B 5 Blower SW
A 1 A/C Magnetic Clutch
J 4 Junction Connector
IA
W–B
L–R(∗2)
L–W(∗1)
L–R(∗1)
G–W

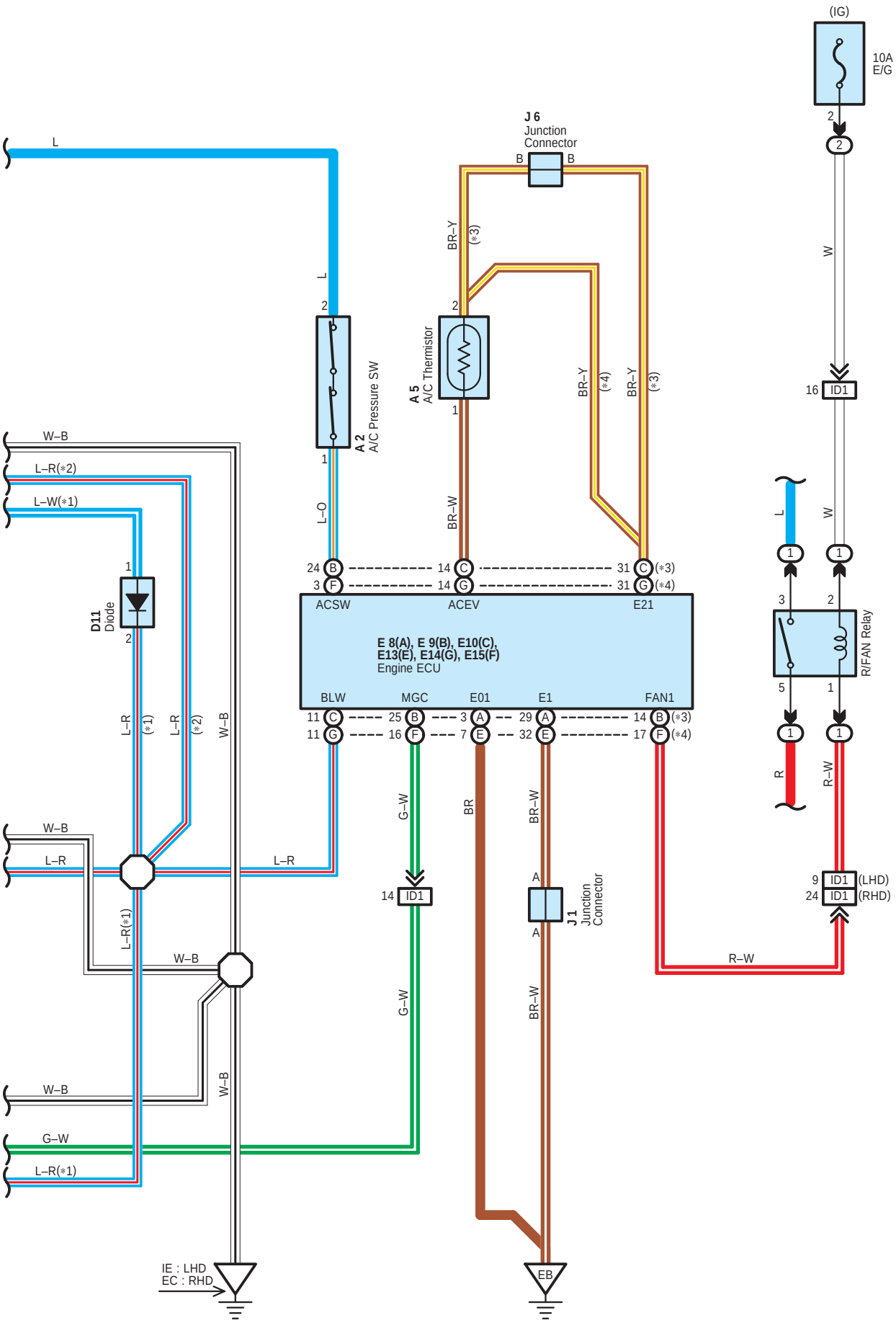
(IG)
10A
E/G
J 6
Junction
Connector
A 2
A/C Pressure SW
A 5
A/C Thermistor
D11
Diode
E 8(A), E 9(B), E10(C),
E13(E), E14(G), E15(F)
Engine ECU
ACSW
ACEV
E21
BLW
MGC
E01
E1
FAN1
R/FAN Relay
J 1
Junction
Connector
ID1
(LHD)
(RHD)
IE : LHD
EC : RHD
EB

System Outline

Current is applied at all times through the (BLR) fuse to TERMINAL 5 of the (BLR) relay.
When the ignition SW is turned on, the current flows through the IG1/BACK fuse to TERMINAL 2 of the (BLR) relay to TERMINAL 1 to TERMINAL 8 of the blower SW.

Blower Motor Operation

∗ Low speed operation
When the blower SW is moved to low position, the current flows to TERMINAL 8 of the blower SW to TERMINAL 1 to GROUND, causing the (BLR) relay to turn on. This causes the current flows from the (BLR) fuse to TERMINAL 5 of the (BLR) relay to TERMINAL 3 to TERMINAL 2 of the blower motor to TERMINAL 1 to TERMINAL 1 of the blower resistor to TERMINAL 4 to GROUND, rotating the blower motor at low speed.

∗ Medium speed operation (Operation at medium Low, medium High)
When the blower SW is moved to 2 position, the current flows to TERMINAL 8 of the blower SW to TERMINAL 1 to GROUND, causing the (BLR) relay to turn on. This causes the current flows from the (BLR) fuse to TERMINAL 5 of the (BLR) relay to TERMINAL 3 to TERMINAL 2 of the blower motor to TERMINAL 1 to TERMINAL 1 of the blower resistor to TERMINAL 2 to TERMINAL 6 of the blower SW to TERMINAL 1 to GROUND. At this time, the blower resistance of the blower resistor is smaller than at low speed, so the blower motor rotates at medium low speed.
When the blower SW is moved to 3 position, the current flows through the (BLR) relay to TERMINAL 2 of the blower motor to TERMINAL 1 to TERMINAL 1 of the blower resistor to TERMINAL 3 to TERMINAL 5 of the blower SW to TERMINAL 1 to GROUND. At this time, resistance of the blower resistor is smaller than at 2 position, so the blower motor rotates at medium high speed.

∗ High speed operation
When the blower SW is moved to high position, the current flows to TERMINAL 8 of the blower SW to TERMINAL 1 to GROUND, causing the (BLR) relay to turn on.
This causes the current flows from the (BLR) fuse to TERMINAL 5 of the (BLR) relay to TERMINAL 3 to TERMINAL 2 of the blower motor to TERMINAL 1 to TERMINAL 4 of the blower SW to TERMINAL 1 to GROUND, rotating the blower motor at high speed.

: Parts Location

Code	See Page	Code	See Page	Code	See Page
A1	24 (*1)	B3	36 (*5)	E13 E	28 (LHD)
	26 (*2)	B4 A	28 (LHD)	E14 G	28 (LHD)
	32 (*3)		36 (*5)	E15 F	28 (LHD)
	34 (*4)	B5	28 (LHD)	J1	29 (LHD)
A2	24 (*1)		36 (*5)		37 (*5)
	26 (*2)	D11	28 (LHD)	J4	29 (LHD)
	32 (*3)		36 (*5)		37 (*5)
	34 (*4)	E8 A	28 (LHD)	J6	29 (LHD)
A5	28 (LHD)		36 (*5)		37 (*5)
	36 (*5)	E9 B	28 (LHD)	R8	31 (LHD)
A12	28 (LHD)		36 (*5)		41 (RHD)
	36 (*5)	E10 C	28 (LHD)		
B3	28 (LHD)		36 (*5)		

: Relay Blocks

Code	See Page	Relay Blocks (Relay Block Location)
1	22	Engine Room R/B (Engine Compartment Right)
2	23 (LHD)	Fuse Block (Left Kick Panel)
	23 (RHD)	Fuse Block (Right Kick Panel)

* 1 : LHD 3SZ–VE * 2 : LHD K3–VE * 3 : RHD 3SZ–VE * 4 : RHD K3–VE * 5 : RHD w/ Heater * 6 : RHD w/o Heater

: Connector Joining Wire Harness and Wire Harness

Code	See Page	Joining Wire Harness and Wire Harness (Connector Location)
IA1	44 (LHD)	Engine Wire and Instrument Panel Wire (Right Kick Panel)
	48 (*5)	Engine Wire and Instrument Panel Wire (Left Kick Panel)
IC1	44 (LHD)	Instrument Panel Wire and Roof Wire (Cowl Side Panel RH)
	48 (*5)	
ID1	44 (LHD)	Engine Room Main Wire and Instrument Panel Wire (Right Kick Panel)
	48 (*5)	Engine Room Main Wire and Instrument Panel Wire (Cowl Side Panel RH)
ID2	44 (LHD)	Engine Room Main Wire and Instrument Panel Wire (Right Kick Panel)
	48 (*5)	Engine Room Main Wire and Instrument Panel Wire (Cowl Side Panel RH)

: Ground Points

Code	See Page	Ground Points Location
EB	42 (*1)	Rear Side of Engine Block
	43 (*2)	
	46 (*3)	
	47 (*4)	
EC	46 (*3)	Left Fender Apron
	47 (*4)	
IA	44 (LHD)	Right Kick Panel
	48 (*5)	Left Kick Panel
IE	44 (LHD)	Cowl Side Panel LH

* 1 : LHD 3SZ–VE * 2 : LHD K3–VE * 3 : RHD 3SZ–VE * 4 : RHD K3–VE * 5 : RHD w/ Heater * 6 : RHD w/o Heater